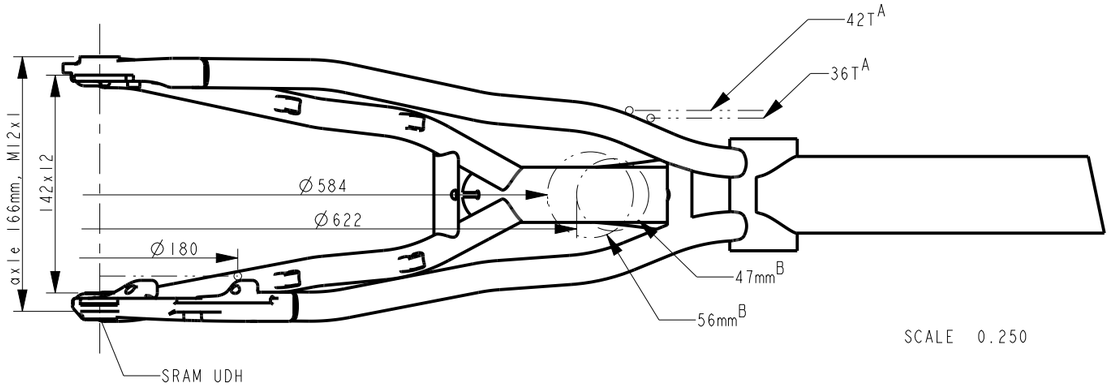

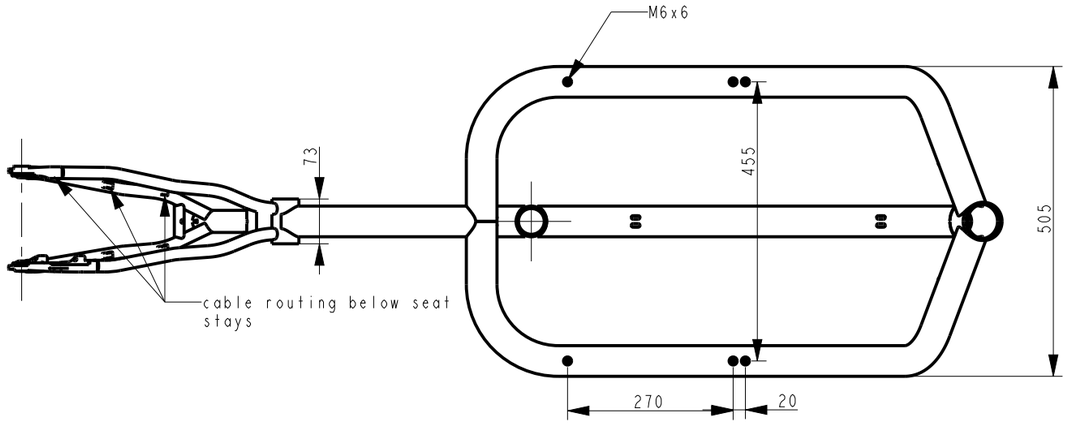

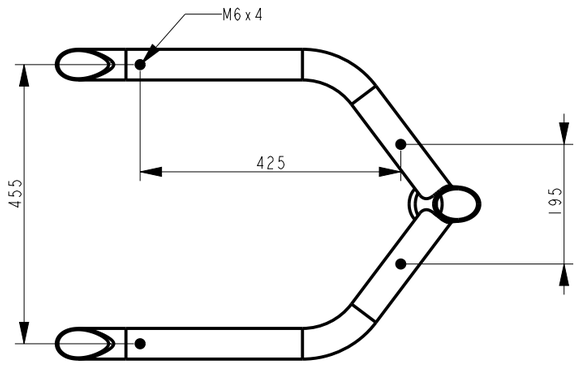

SECTION A-A

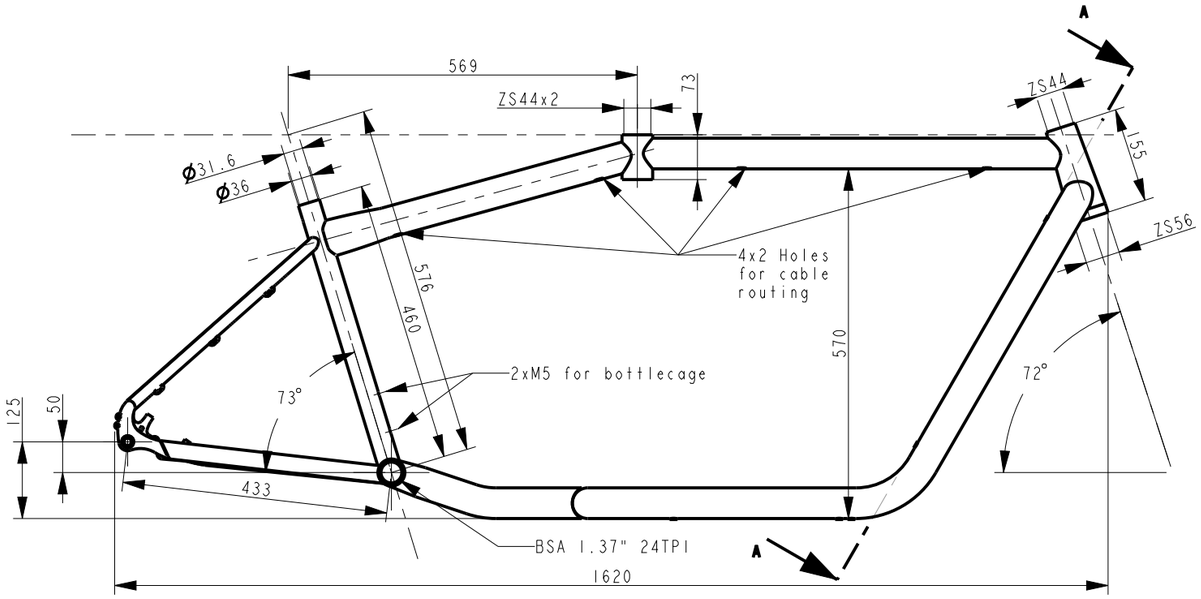

A 36T at 50 mm chain line (single or triple MTB crankset)
42T at 55 mm chain line (triple MTB crankset)

B Clearance for 47 mm tire using 622 mm rim (47x700c)
Clearance for 56 mm tire using 584 mm rim (27.5x2.1")

MATERIAL	NAME						
6061 T6	2021 Standard					GinkGo	
	WEIGHT g (ONLY FOR INFORMATION) 5300						
PAPER	DRAWN BY & DATE	PROJECTION	SCALE	STATE		ISSUE	SHEET
A3	MNo 2020-11-23		0.100	1	000-013-020	1	1(1)